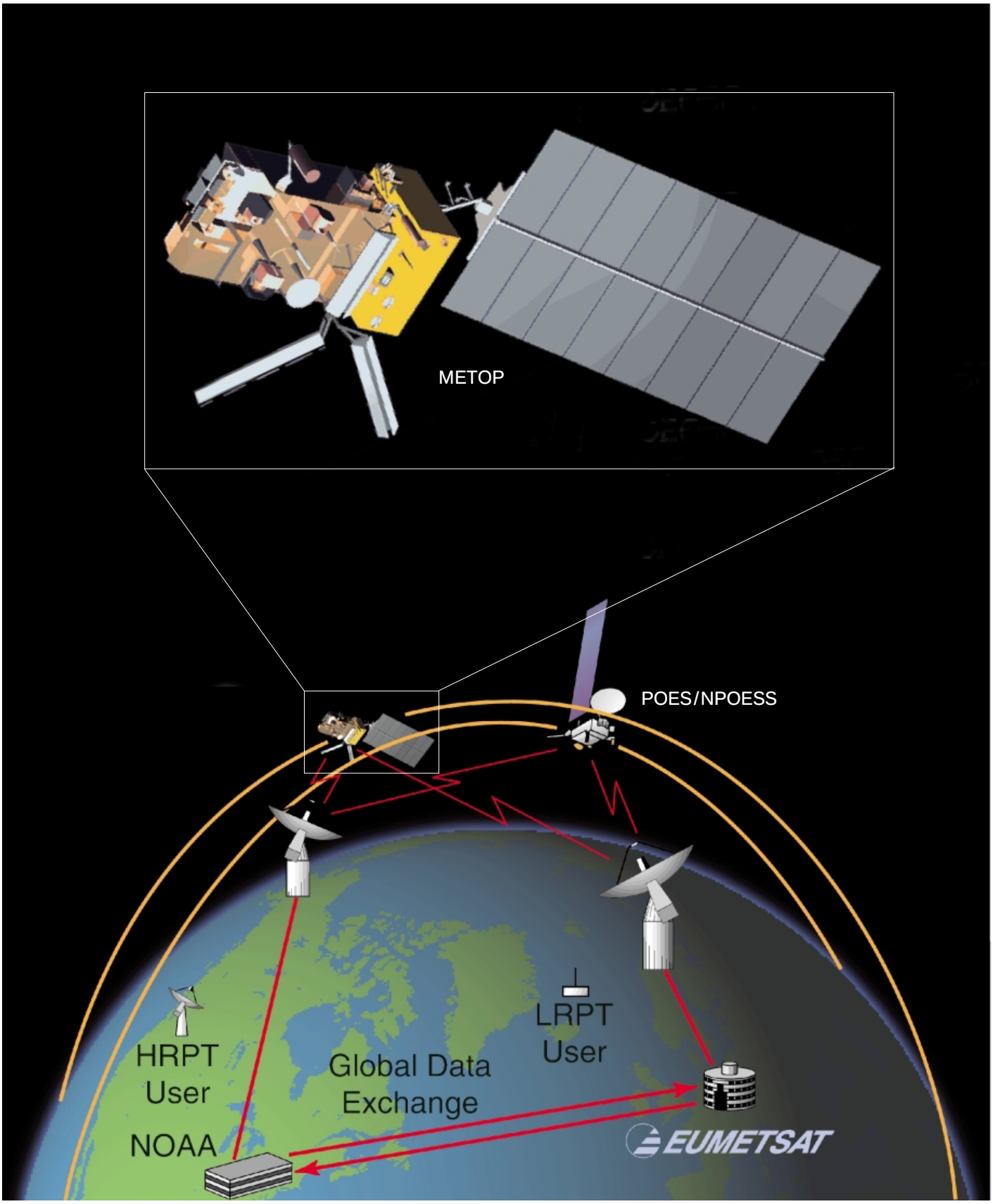

Figure 1. Principle of the Joint Polar System operations

Metop: The Space Segment for Eumetsat's Polar System

P.G. Edwards
Earth Observation Projects Department, ESA Directorate of Application Programmes, ESTEC, Noordwijk, The Netherlands

D. Pawlak
Matra Marconi Space*, Toulouse, France

Metop-1 will be Europe's first polar-orbiting satellite dedicated to operational meteorology. As such, it marks the start of our contribution to balance a long-standing service provided by the United States from its Tiros, now POES (Polar Orbiting Environmental Satellite), Programme.

The first Tiros satellite was launched 40 years ago and in the intervening period the US has provided the data from this evolving series of satellites free of charge to the worldwide meteorological community. As early as 1967, Europe looked towards balancing this effort, but initially selected a geostationary satellite mission as the higher priority. This led to the development of the Meteosat series of satellites, the first of which was launched in 1977.

Introduction

Over the years, the need for high-resolution data sets for a wide range of atmospheric parameters, with global coverage, has become more pressing with the increasing sophistication of the numerical weather-prediction models. The instrumentation initially embarked on the Tiros satellites has evolved and now spans the electromagnetic spectrum from microwaves through the infrared to the visible, thereby enabling height profiles of many parameters to be determined. After decades of such evolution, the new generation of polar-orbiting meteorological satellites under development on both sides of the Atlantic – Metop in Europe and the National Polar Orbiting Environmental Satellite System (NPOESS) in the USA – will carry considerably larger and more capable sets of instrumentation.

The US is currently operating polar-orbiting meteorological satellites in four Sun-synchronous orbital planes, for two services: an early morning and afternoon pair of military satellites (DMSP) and a mid-morning and afternoon civil pair operated by NOAA. There have been many earlier proposals to merge these services and this convergence is now underway in conjunction with an agreement with Europe, represented by Eumetsat, to participate. The resulting Joint Polar System (JPS) will maintain three orbital planes, in the early morning, mid-morning and afternoon. The Eumetsat Polar System, of which Metop is the space segment, will provide the mid-morning service (at a mean local solar time of 09:30), whilst the US NPOESS satellites will provide the other two services.

There will be a transitional phase (termed the Interim JPS, or IJPS) during which the older generation of instruments will continue to fly as the newer instruments are introduced. Thus Metop-1, -2 and -3 will embark both the older instruments, provided by NOAA, as well as more advanced, European, ones. The principle of the joint systems is shown in Figure 1.

The Metop satellites were originally part of a much larger satellite concept, called POEM, which was to have been the successor to ERS-1 and -2, based on the Columbus Polar Platform. This very large satellite would have carried the payloads of both Envisat and Metop and was imagined to be re-serviceable in-orbit. At the ESA Ministerial Council in Granada (E) in 1992, this idea was abandoned and Envisat and Metop were born. Metop is a joint undertaking by ESA and Eumetsat and forms part of the Eumetsat Polar System (EPS). In addition to the space segment (i.e. Metop), the latter comprises the ground segment, the launch and various infrastructure elements. The EPS is at present planned to provide an operational service for a period of 14 years, which requires the provision of three Metop satellites, each with a nominal lifetime of 5 years – an overlap period is assumed between them for commissioning (Fig. 2).

The EPS, and Metop in particular, have a number of objectives. This system is the European contribution is the improved polar-

* Now Astrium SAS.

orbiting meteorological satellite service being offered to the world's meteorological organisations. It also has to satisfy some specific needs of the European and US meteorological services; in Europe there is an increasing trend towards commercialisation of earth-observation, and hence meteorological, data, while in the US there are concerns over the direct broadcasting of data from US-provided instruments at times of national crisis.

The notable improvements in the service required of Metop are:

- Provision of new instrumentation (ASCAT, IASI, GOME-2 and GRAS) compared to the current generation of NOAA satellites.
- Provision of a low-data-rate digital direct broadcast service at VHF to replace the analogue APT (Automatic Picture Transmission) system, employing data-compression to ensure high-quality images.
- Continuous on-board recording of the global data set to be dumped every orbit at a high-latitude ground station, with a ground segment sized to provide the global processed data within 2.25 h of the measurements being made.
- High pointing and orbital stability to ensure that data may be geo-located without reference to ground-control points in imagery.
- A selective encryption system to ensure the commercial and data-denial needs of Eumetsat and the US Government, respectively.

The satellite's main performance figures are provided in Table 1.

Figure 2. Timing of the joint meteorological systems operations

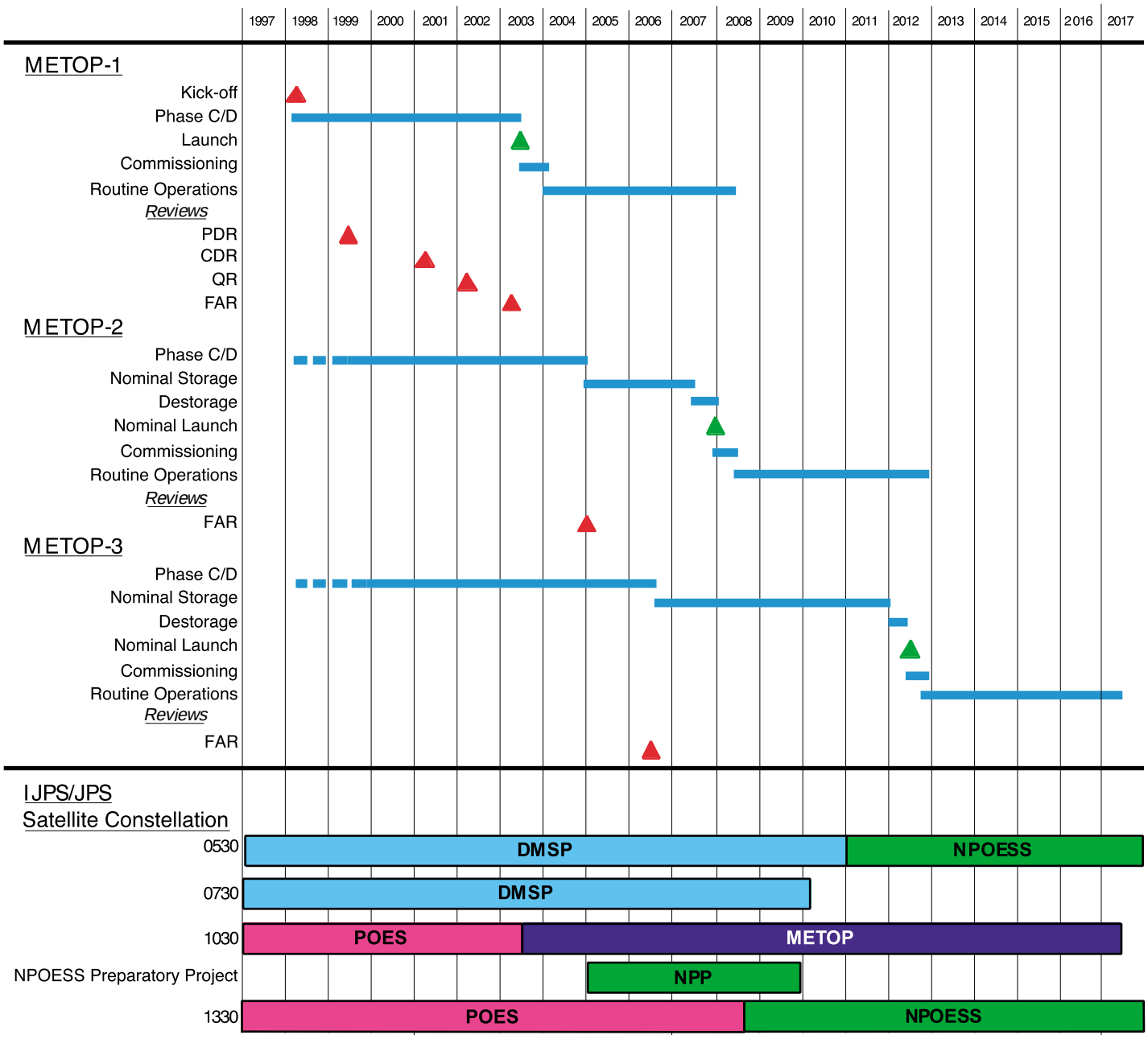

The payload composition of the first three Metop satellites may be divided into categories. In the first group are instruments providing the transition from the current NOAA satellites:

- *Advanced Very High Resolution Radiometer (AVHRR),* an optical/infrared imager with a spatial resolution of about 1 km over a very wide swath of some 2000 km.
- *High-resolution Infra-Red Sounder (HIRS),* a spectrometer with a relatively coarse spatial resolution and a mechanical scan over a wide swath, from which height profiles of atmospheric pressure and temperature may be derived – this instrument will not be embarked on Metop-3, its measurement functions being taken over by IASI, described below.
- *Advanced Microwave Sounding Unit A (AMSU-A),* a mechanically scanned multi-channel microwave radiometer for the determination of pressure and temperature profiles.
- *Microwave Humidity Sounder (MHS),* a new instrument, which will fly on the last of the NOAA satellites, which exactly replaces the AMSU-B currently provided by the UK Meteorological Office to NOAA.
- *Space Environment Monitor (SEM),* which measures the charged-particle radiation environment in the vicinity of the satellite.
- *Data Collection System (DCS/Argos),* a radio receiving and storage system, which receives brief telemetry signals from a large global network of remote stations, most of them unmanned and mobile. As well as providing these messages to a central processing and distribution site, this new version of the system may also send messages to the remote terminals.
- *Search and Rescue (S&R),* a similar system which immediately rebroadcasts signals received from emergency transmitters typically carried on vessels and aircraft, enabling rescue services over a wide geographical area to locate the transmitter.

Table 1. Metop main features and performances

Area	Performance
Spacecraft orbit:	- Sun-synchronous near-circular orbit, altitude at ascending node: 796 to 844 km - Repeat cycle : 5 days (71 orbits) - Local solar time : 09h30 (descending node)
Launch mass:	4174.8 kg
On-board propellant:	315.7 kg of hydrazine, stored in 4 tanks (including residual)
Spacecraft attitude:	- Three-axis stabilised through reaction wheels - Orbit manoeuvres through hydrazine propulsion system - Pointing knowledge : 0.07° (X-axis), 0.10° (Y-axis), 0.17° (Z-axis)
Data handling:	- Instrument science data acquired as CCSDS packets - Science data formatting and multiplexing, encryption for selected instruments - Instrument and housekeeping data storage in a solid-state recorder (24 Gbit)
Communications:	- Omnidirectional S-band coverage (uplink 2 kbps, downlink 4.096 kbps) - Instrument global data stream downlinked via X band (70 Mbps data rate) - Real-time broadcasting of instrument data with HRPT: 3.5 Mbps via L-band for all instruments, and LRPT: 72 kbps via VHF for selected instruments
On-board power:	- 2210 W from solar panel, average power over one orbit (EOL) - Five 40 Ah batteries - 22 - 37.5 V unregulated, and 50 V regulated power lines for SVM/PLM units - 22 - 37 V unregulated power lines for European instruments - 28 V regulated power lines for NOAA instruments
Mission lifetime:	5 years
Launcher:	Ariane-5, or Atlas IIAS
Operations:	- Spacecraft controlled by Eumetsat (Kiruna ground station) - Instrument X-band data down-linked nominally over 2 ground stations - Recorded data down-linked not later than one orbit after recording - Spacecraft autonomy required for 36 h without ground contact

The second group are from the new generation, and offer improved sensing capabilities:

- *Infrared Atmospheric Sounding Interferometer (IASI),* is an important new development, which will provide a significant improvement in the resolution of vertical temperature and humidity profiles in the atmosphere.
- *Advanced Scatterometer (ASCAT),* developed within the framework of the Metop-1 contract, which uses multiple radar beams to measure the small-scale roughness of the ocean surface from three directions, over a wide swath on each sidenof the satellite, enabling the speed and direction of the wind to be determined.
- *Global Ozone Measurement Experiment 2 (GOME-2),* a successor to the ERS-2 GOME-1 with a number of improvements, is a high-resolution visible/ultraviolet spectrometer, which provides measurements over a wide swath and wide spectral range such that ozone profiles and total column amounts of many other trace gases may be determined.
- *GNSS Receiver for Atmospheric Sounding (GRAS),* also developed within the framework of the MetOp-1 contract, is a geodetic-quality GPS receiver equipped with three antennas such that it is able to measure the signals from GPS satellites in occultation by the Earth's atmosphere, enabling temperature and pressure profiles to be determined.

The main performance parameters of these instruments are summarised in Table 2.

Table 2. Instrument performances

Instrument	Main Characteristics	Main Data Products	Heritage	Notes
AVHRR	Six-channel Vis/IR imager (0.6 - 12µm), swath 2000 km, 1 x 1km resolution	Wide-swath vertical sounding plus imagery temperature profile, humidity profile generated by Tiros Operational Vertical Sounder (TOVS/ATOVS) combining data from HIRS, AMSU A1/A2 and MHS, supported by AVHRR Secondary Products: sea-surface temperature, cloud fraction/cloud top height, aerosol, precipitable water, surface emission, total ozone, sea-ice extent	TIROS/POES	
HIRS	20-channel Optical/IR filter-wheel radiometer; swath 2000 km; IFOV 17.4 km (nadir)		TIROS/POES	Disembarked for METOP-3
AMSU-A1/A2	Step-scan 15 channel total power MW radiometers for 50 GHz oxygen absorption line; swath 2000 km; IFOV 30 km (nadir)		TIROS/POES	
MHS	Five-channel quasi-optical heterodyne radiometer, 190 GHz for water-vapour absorption line plus 89 GHz for surface emissivity. Swath 2000 km, IFOV 30 km (nadir)		TIROS/POES	As AMSU-B
IASI	Fourier-transform spectrometer, 4 IFOV's of 20 km at nadir in a square 50 x 50 km. Step-scanned across track (30 steps), synchronised to AMSU-A. Integrated (Near-IR) imager for cloud discrimination. Calibration: blackbody plus two deep-space views	Water-vapour sounding; NO_2 and CO_2 ; temperature sounding; surface and cloud properties. Swath width: 2000 km Performance: spectral range: 3.62-15.5 µm in 3 bands; resolution 0.35 cm^{-1}; radiometric accuracy 0.25 - 0.58 K	New development	Replaces and supplements HIRS
ASCAT	C-band radar scatterometer, with three dual-swath antennas (fore/mid/aft). Measurement of radar backscatter at three different azimuth angles; fit to a model function to extract wind speed and direction. Incidence angle range: 25° – 65°	Surface-wind vectors over oceans; additional products (e.g. sea-ice cover; snow cover; vegetation density). Swath width: 2 x 500 km; Quasi-global coverage: 2.5 d.Wind velocity: ± 2ms^{-1} or 10%; Wind direction: ± 20°	ERS-1/-2 AMI-Scatterometer	
GOME-2	Scanning spectrometer with spectral coverage: 250–790 nm at resolution 0.2–0.4 nm. Double monochromator design: first stage: quartz prism with physical separation of four channels; second stage: blazed gratings in each channel. Detector: 1024 pixel random-access silicon-diode arrays;	Ozone (total column and profiles, stratosphere and troposphere); NO_2 BrO OClO ClO; Albedo and aerosol: cloud fraction, cloud-top altitude, cloud phase. Swath width: 960 or 1920 km, resolution 80 x 40 or 160 x 40 km	ERS-2 GOME-1	
GRAS	GPS satellite receiver measuring changes during occultation (rising or setting); computation of bending angle and TEC; retrieval of refractive index vs altitude profile; fitting data to stratospheric model for temperature profile. Bending angle measurement accuracy better than 1 µrad.	Up to 500 occultations/day, with quasi-uniform geographical distribution Vertical temperature sounding of ±1 K, with vertical resolution of 150 m in the troposphere (5 - 30 km) and 1.5 km in the stratosphere	GPS/MET	

Aspects of cooperation

The EPS and the Metop Programme are intensively collaborative in that five major agencies are extensively involved:

- Eumetsat: System authority, develops Ground Segment and MHS, co-funds Metop and IASI, procures launcher, operates system.
- ESA: Co-funds and develops Metop, ASCAT, GOME-2 and GRAS.
- NOAA: Funds US instruments for Metop; System authority for POES as part of IJPS.
- NASA: Develops/procures AVHRR, HIRS, AMSU and SEM for Metop.
- CNES: Co-funds and develops IASI; Funds and develops DCS, SARP.

A special relationship has been developed between ESA and Eumetsat, governed by a

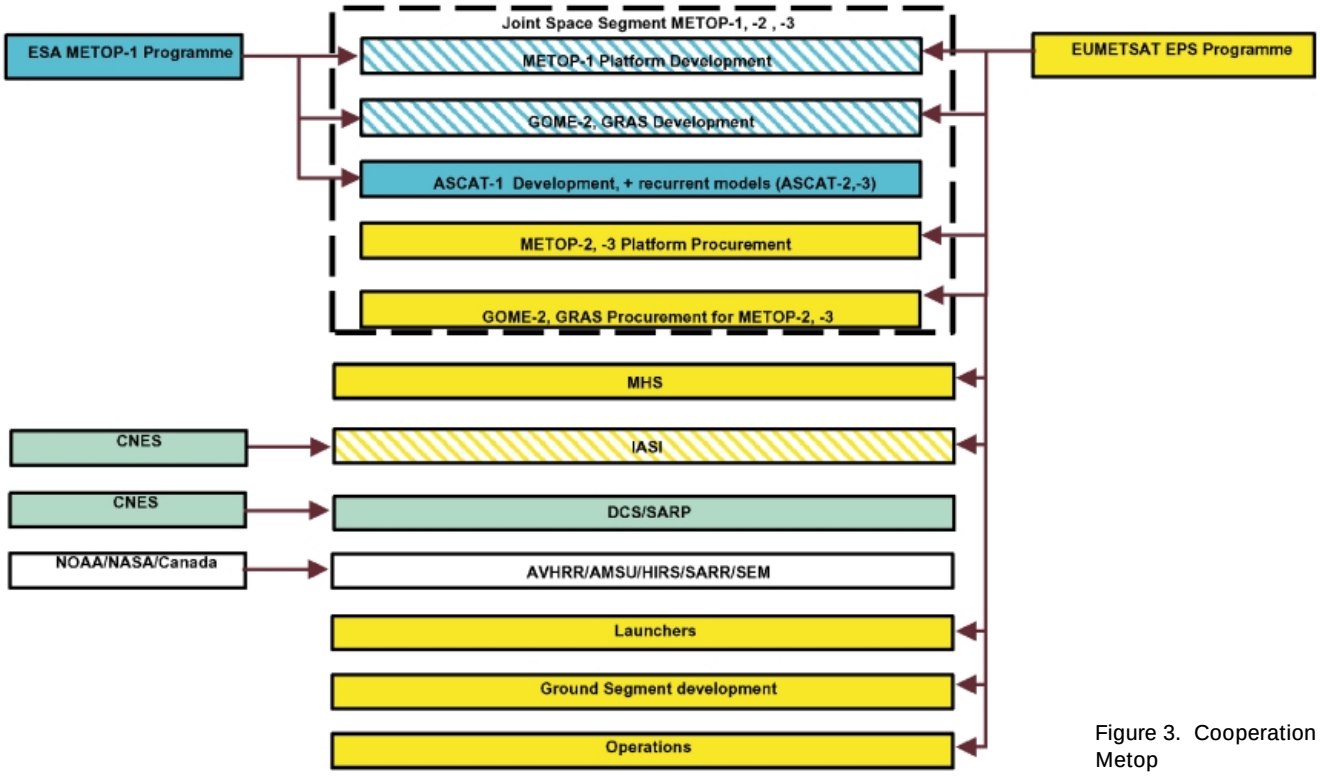

Figure 3. Cooperation on Metop

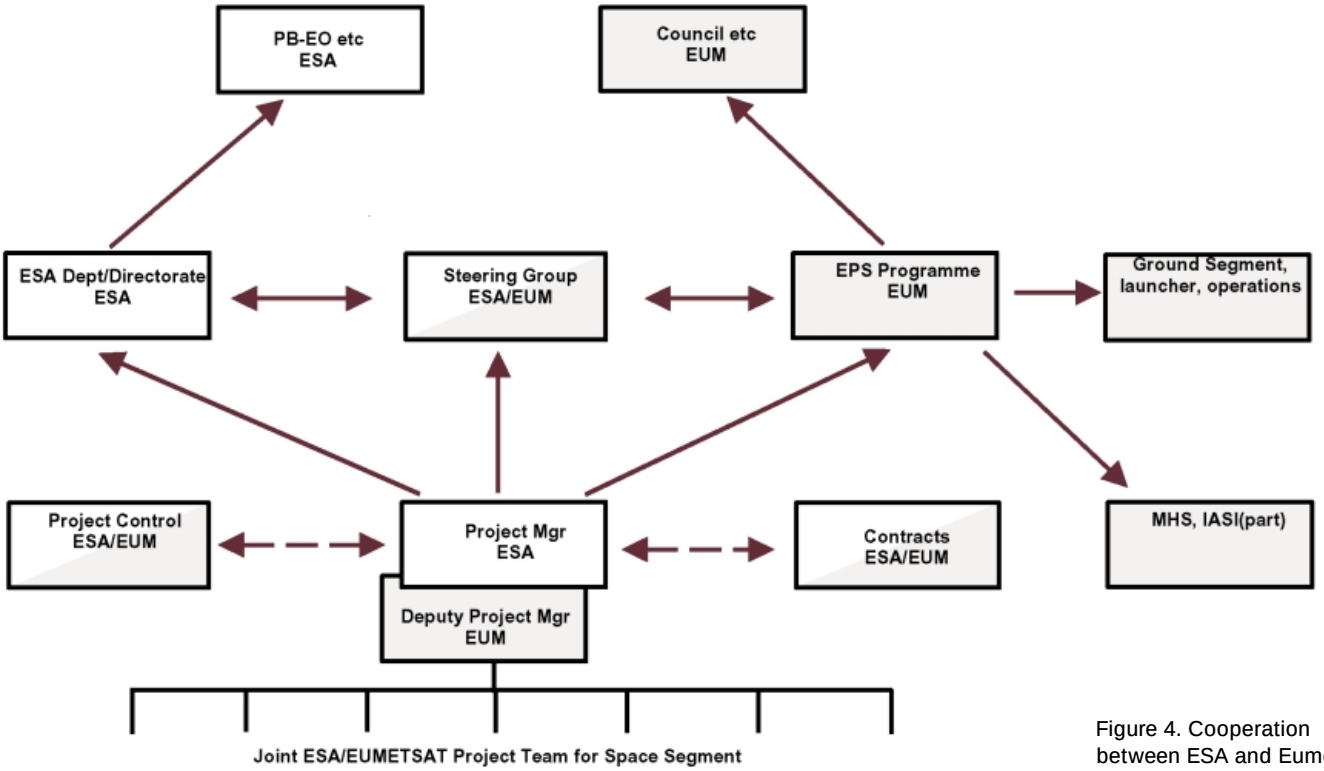

Figure 4. Cooperation between ESA and Eumetsat

legal act, the Cooperation Agreement, signed in December 1999. In this cooperation, a co-funding arrangement is established for the Metop industrial contracts, which is managed by a joint project team called the 'Single Space Segment Team (or SSST)', comprised of staff from both organisations and located at ESTEC. The team has an ESA project manager assisted by a Eumetsat deputy. The respective responsibilities are shown in Figures 3 and 4.

Industrial architecture

The Prime Contractor for Metop is Matra Marconi Space France (MMS-F). The contract includes the three Metop spacecraft and the ASCAT and GRAS payload instruments. A separate contract within the Metop Programme has been placed with Officine Galileo/Alenia Difesa for the three GOME-2 instruments. All other payload instruments are provided to the Metop Programme as customer-furnished instruments via Eumetsat.

MMS-F is responsible for the execution of all tasks performed by the industrial team, including system-level tasks and satellite assembly, integration and testing, and for the Service Module (SVM) with its Electrical Ground Support Equipment (EGSE).

Among the various contractors involved,

- Dornier Satellitensysteme (DSS)* is responsible for the Payload Module, ASCAT, and GRAS (with Saab-Ericsson)
- MMS-UK** is responsible for the Service Module mechanical system, and system-support tasks
- Alenia is responsible for DCS/Search & Rescue mission integration and accommodation hardware.

Subcontractors, at unit or subsystem level, have been selected on the basis of heritage, or after competition. Figure 5 shows the current industrial team.

* Now Astrium GmbH
**Now Astrium Ltd.

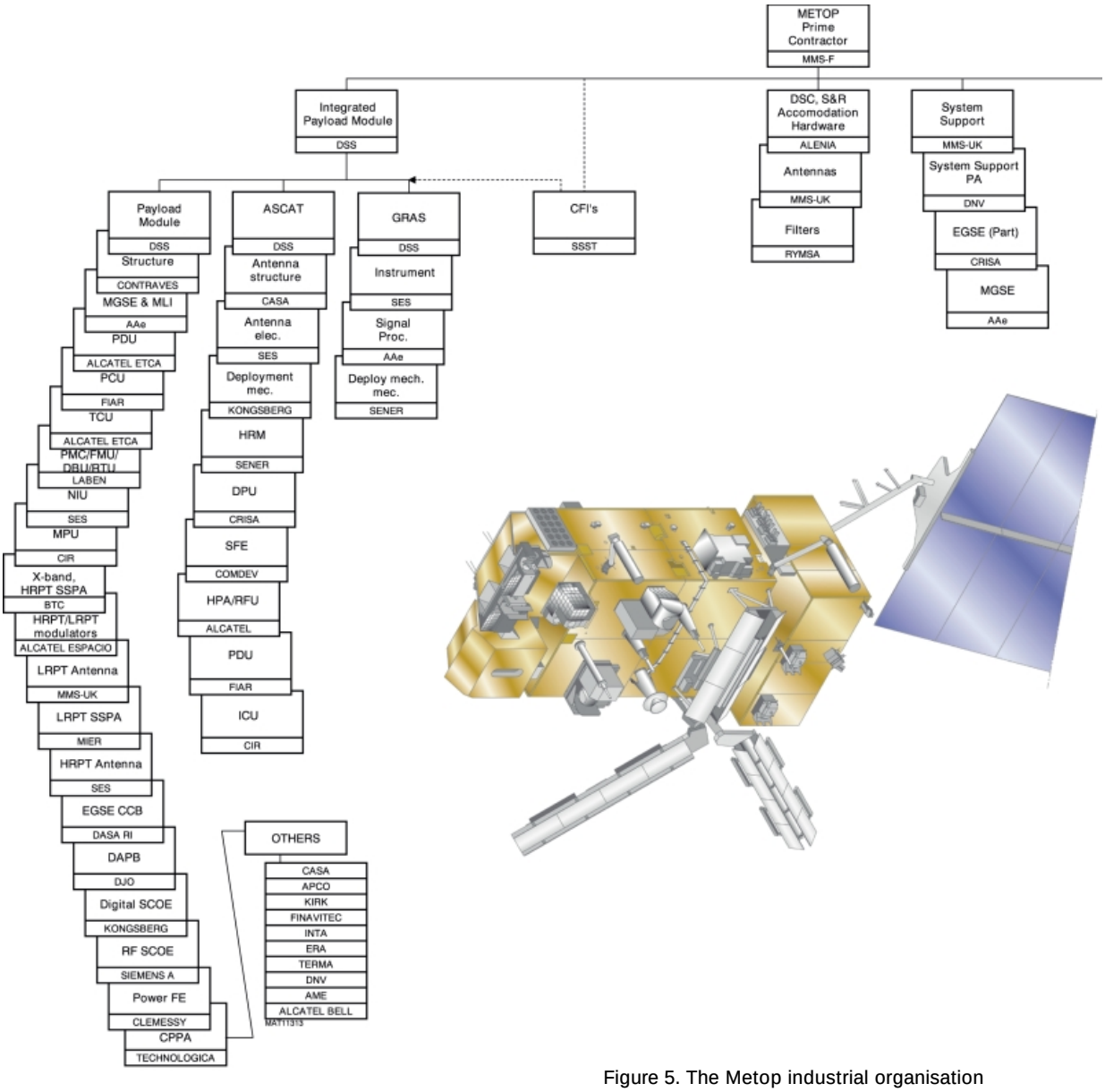

Figure 5. The Metop industrial organisation

Context of the mission

The Metop satellite and its payload embody a great deal of heritage, which has two primary benefits. The heritage of the satellite (especially the SVM) and its equipment have enabled significant cost savings in the development programme, while the heritage of the payload and services is an essential element in the efficient exploitation of the mission data. Almost all payload elements have direct and operational precursors, the only exception being the GRAS instrument, and even this is the operational follow-on to an in-orbit experiment. The transitional instruments in the first group above, commonly called the ATOVS package, supplemented by the DCS/S+R and SEM, are directly recurrent from the US satellites and have a strong heritage both in terms of hardware provision as well as in the processing and exploitation of the data. Amongst these, the MHS instrument is being developed within the same broad time-frame as Metop-1, but it is intended to be a direct replacement for the AMSU-B and, furthermore, it will fly before Metop on at least one US satellite.

The ASCAT depends on the same physical principle as the scatterometers on ERS-1 and ERS-2, and the higher level processing of the data is equivalent. Hence it may be rapidly adopted as an operational instrument, as the ERS-2 instrument is today. However, it has two swaths compared to the one of ERS and also uses a different radar technique, such that the data pre-processing needs to be newly developed. The GOME-2 is also strongly related to the equivalent instrument on ERS-2, again leading to many advantages in terms of procurement, development of operational data processors, and existing user-experience in the data exploitation.

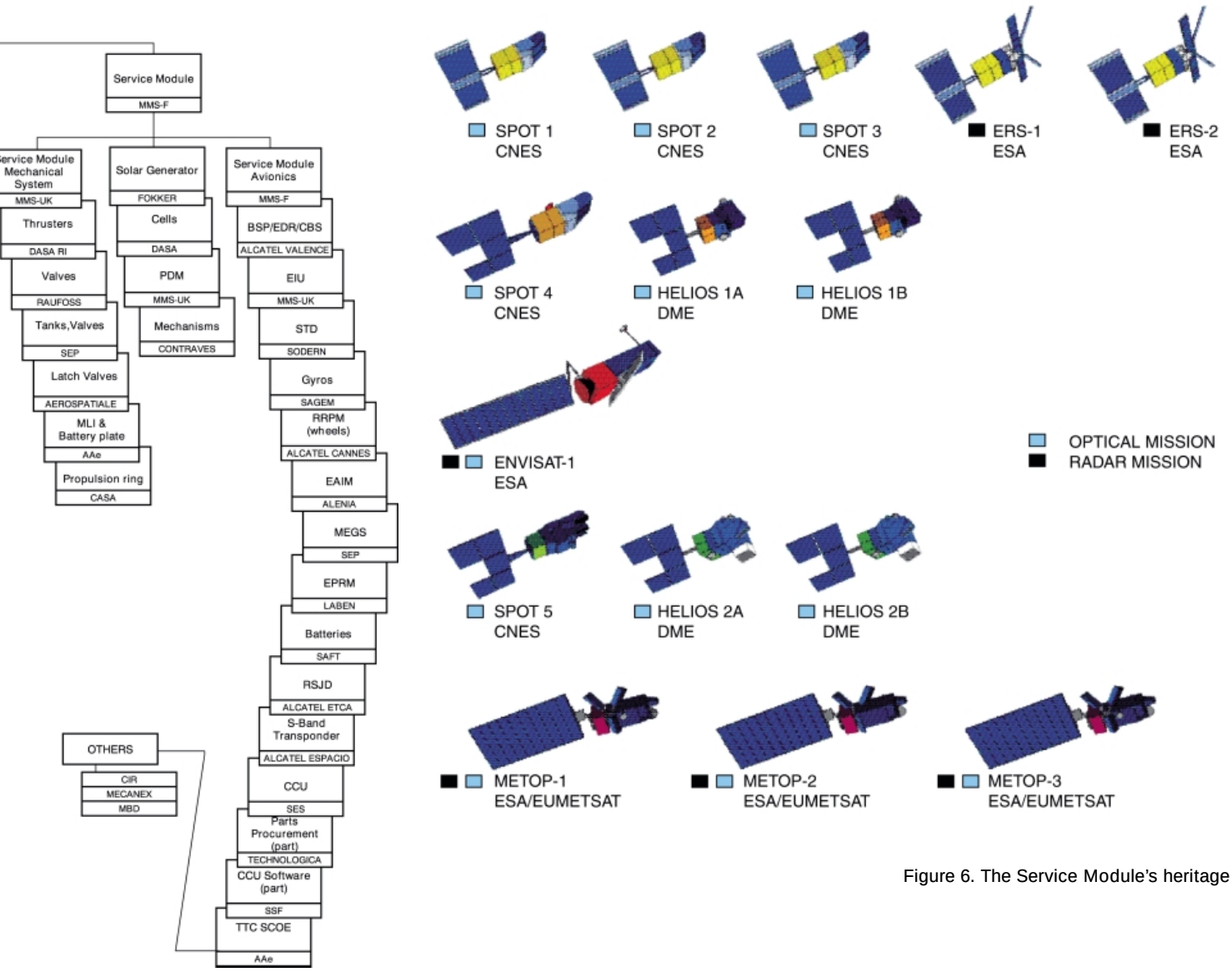

Figure 6. The Service Module's heritage

MMS has more than twenty years of experience in the development of low-Earth-orbit service modules which is of direct benefit for Metop. Regular upgrades to the Spot-1 concept have been performed to meet higher performance requirements and to maintain up-to-date avionics and technologies. A cumulated 46 year lifetime in orbit has been achieved today with 8 satellites (ERS-1 and 2, Spot-1, 2, 3 and 4, and Helios-1A and 1B) using the same SVM concept (Fig. 6). The Spot-1 SVM completed its 14th year of operation last year. ERS-1 operated very successfully for almost 9 years.

Overall architecture of the satellite

In order to accommodate the mission, and to ease the development as well as the verification process, the satellite's overall design is based on a modular approach, which relies upon two largely independent modules, the Payload Module and the Service Module. Figure 7 shows the Metop in-flight configuration.

The Payload Module (PLM)

The PLM provides the main supporting structure for both the payload instruments and the payload support systems. Instrument sensors and antennas are mounted on the

Figure 7. Metop's in-flight configuration

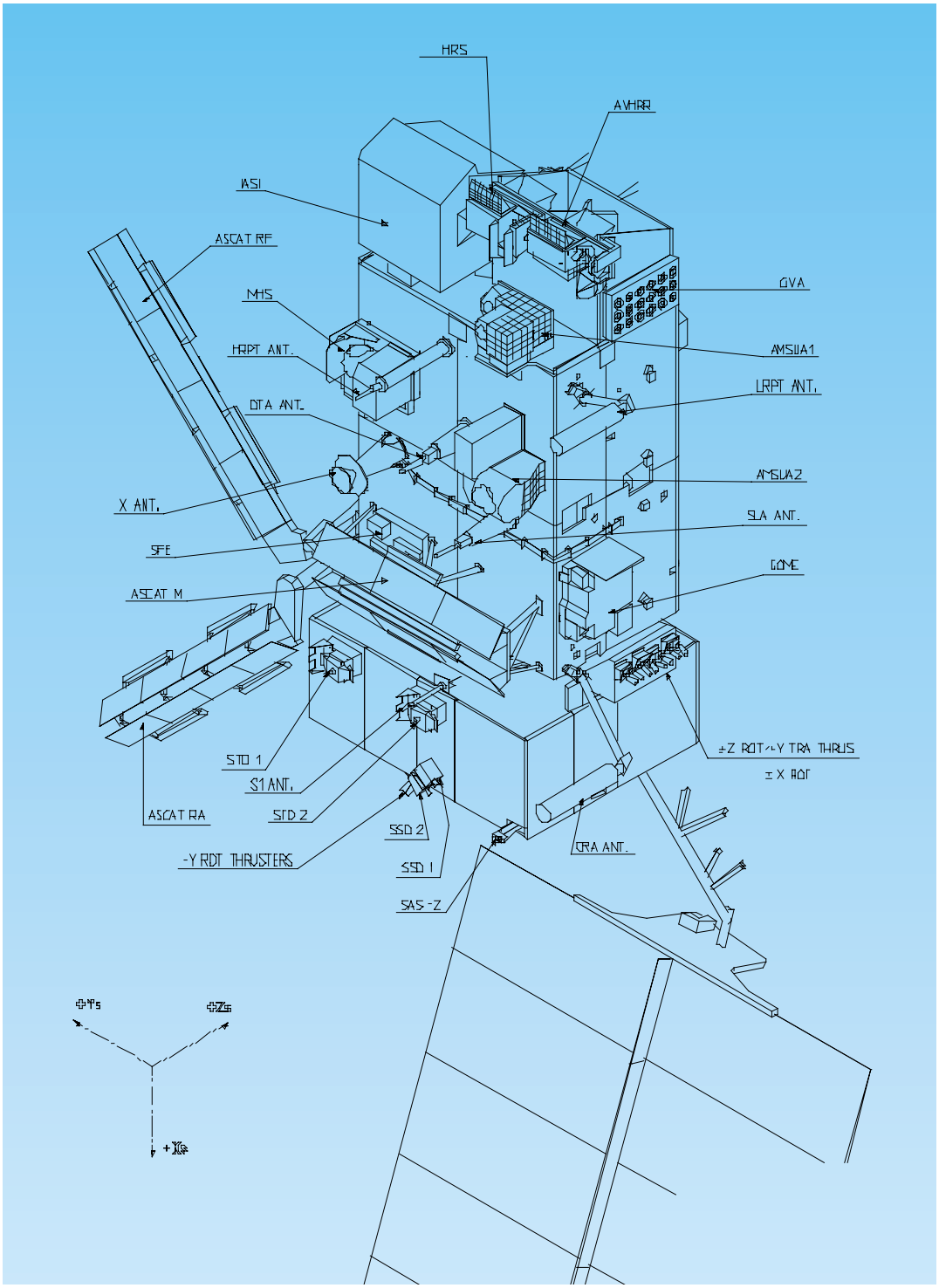

external panels, while most of the electronics units are accommodated inside the PLM.

The accommodation of a large complement of instruments is a significant design driver for the overall PLM configuration, with many constraints originating from instrument fields of view, antenna patterns, and thermal radiators having to be accounted for. In addition to the instrument units, the PLM also houses all of the avionics necessary to ensure:

– power regulation for the US instruments: as these instruments need a 28 V regulated power bus not available from the SVM; a dedicated power control unit is provided by the PLM
– power distribution: each unit or instrument is powered through a switchable and protected line, provided by specific PLM units
– command and control: a dedicated data bus, based on the European On-Board Data Handling Standard (OBDH), is used by the PLM. The Payload Module Computer (PMC) receives commands from the SVM and interfaces with the European instruments ICUs (Instrument Control Units) and MPU (MHS PLM adaptation Unit), as well as with a specific PLM unit for the US instruments
– handling of scientific data consisting of acquisition, formatting, encryption, storage, and transmission to ground of CCDS packetised data through the HRPT (High-Rate Picture Transmission), LRPT (Low-Rate Picture Transmission), and X-band links.

The Service Module (SVM)
The SVM provides all the standard service functions, like:
– attitude and orbit control, to maintain accurate Earth-pointing during the various operational modes, and to perform orbit acquisition and maintenance
– propulsion, for orbit and dedicated manoeuvres, as well as propellant storage
– electrical power generation, through the solar array, storage, conditioning, and overall distribution
– distribution of on-ground and on-board generated commands, and collection of house-keeping telemetry data for transmission to ground through the S-band link
– central on-board software for telemetry generation, telecommand processing, and various application functions (e.g. thermal control, on-board surveillance, automatic command sequencing).

The mechanical subsystem is derived from the Envisat Service Module. It is a box-shaped structure that interfaces with both the launch vehicle and the PLM. Interfaces between the two modules have been standardised as much as possible, and kept to a minimum. Thermal exchanges between the two modules are very limited, mechanical interfaces basically consist of the two modules connection, electrical interfaces are limited to power and OBDH bus, plus solar-array deployment and pyrotechnics needs, data exchanges use telemetry and telecomand packets.

The satellite overall dimensions (in metres) are close to 6.3 (high) by 3.4 x 3.4 (transverse section) in launch configuration, and 17.6 x 6.6 x 5.0, after solar-array and antenna deployment.

Electrical architecture
Modularity and standardisation are the main design drivers for the electrical architecture (Fig. 8). The design offers simple interfaces, and makes use of existing hardware developed in the frames of Spot-5 for the SVM and Envisat for the PLM.

Power generation, storage and distribution
Electrical power is generated by an eight-panel solar array derived from Envisat. Energy storage is provided by five batteries, which allow operation in the launch and early orbit phase (LEOP), eclipse and contingency modes. The primary power bus is an unregulated bus, which is distributed to both the SVM and PLM units. The 28 V power regulation needed by the US instruments is performed by a dedicated PLM unit (PCU).

Command and control
The command and control functions are distributed throughout the spacecraft, and also have to accommodate a range of interface requirements from the heritage instruments. The Metop-specific equipment and instruments use the European OBDH interfaces, while the MHS uses the MIL-STD-1553 interface. Both of these are high-level command and control interfaces allowing for intelligence within the instruments. The heritage instruments from NOAA have a much simpler interface with distributed signal lines.

The distributed command and control architecture features the following elements:

– The primary spacecraft computer is within the SVM and is responsible for the interface to the ground segment and control of the equipment in the SVM and for the overall security of the mission.
– Command and control of the payload is performed by the PLM Computer (PMC), which is connected to the SVM computer via the SVM OBDH bus. This computer controls a specific OBDH bus within the PLM.

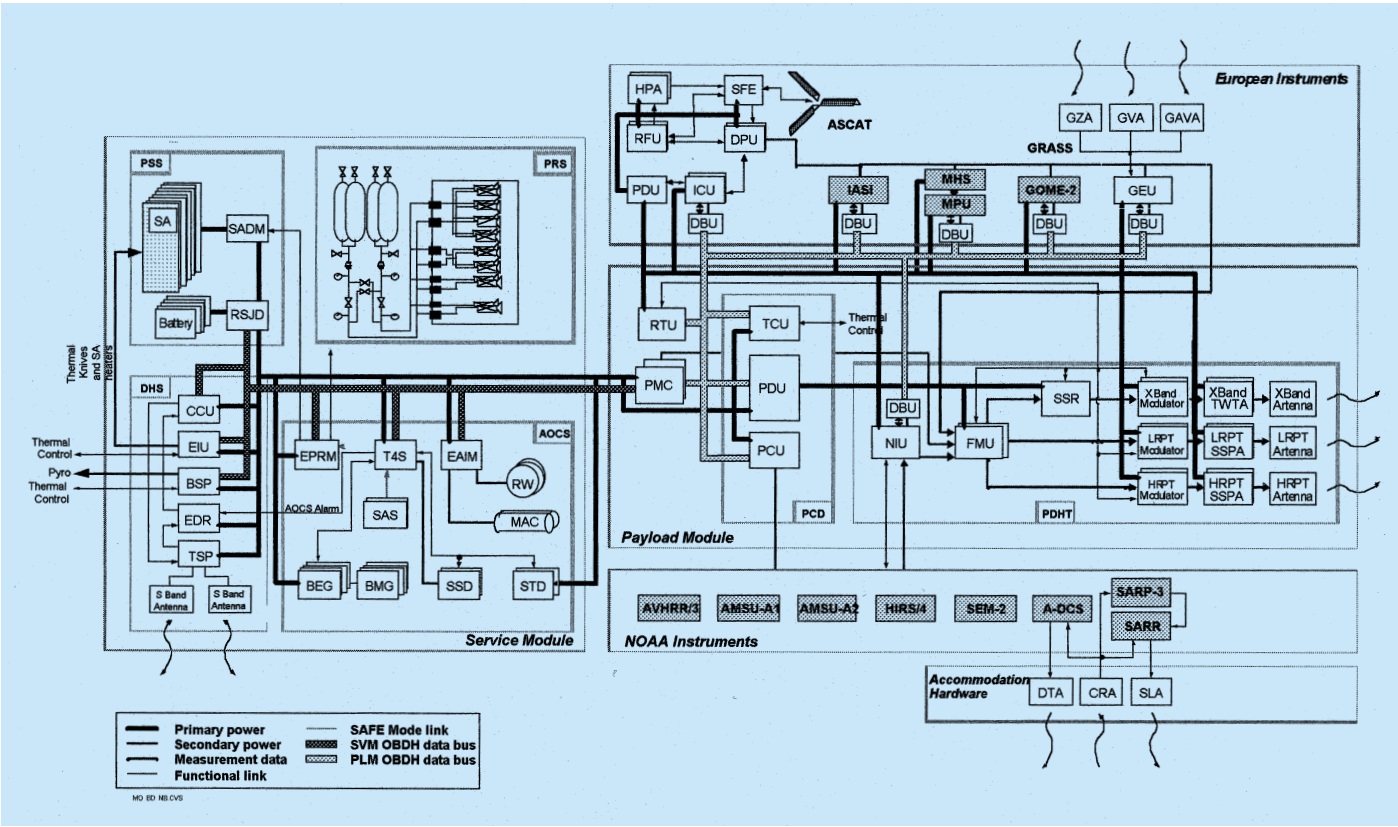

Figure 8. Metop's electrical architecture

– The 'European' instruments (ASCAT, GRAS, GOME, IASI) each include an intelligent Instrument Control Unit (ICU) which communicates with the PMC.
– The MHS communicates via a specific adaptation unit, MPU, or MHS Protocol Unit, which performs the translation between the MHS MIL-STD 1553 bus and the PLM OBDH. The MPU also provides the science-data interface.
– The NOAA Interface Unit (NIU) emulates the Tiros-spacecraft-type interfaces required by the NOAA instruments. It includes its own ICU, which performs the command and control function as well as packaging the NOAA instrument data into CCSDS packets. It also performs the AVHRR data compression.

Payload data handling and transmission
The science data from the payload is provided in the form of CCSDS packets at a wide range of data rates, ranging from 1.5 Mbps for IASI to 160 bps for SEM. The PMC also provides some additional packets required for data exploitation:

– Position and time data derived from the GRAS.
– A copy of the full spacecraft housekeeping telemetry.
– A text 'administration message' which is uplinked and stored on board, providing the facility to broadcast information to remote users.

All of these data streams are multiplexed and provided on three channels going to the on-board recorder, the HRPT, and LRPT direct-broadcast subsystems. Encryption is possible for the direct-broadcast services. Only a subset of the packets is provided to the LRPT.

The Solid-State Recorder is based on the Cluster and Envisat design, and has a capacity of 24 GB at end-of-life. This is sufficient for slightly more than one full orbit of data.The X-band subsystem provides a direct 70 Mbps transmission link to ground during visibility periods, dumping the data stored during the previous orbit to ground.

Telemetry, tracking and command
Two antennas allowing omni-directional coverage interface with the S-band transponder by means of a 3 dB hybrid coupler. Each transponder consists of a diplexer, a receiver and a transmitter.

Attitude and orbit control
The AOCS architecture is based around three units performing the interface between the SVM OBDH bus and the sensors and actuators. A first unit (T4S) interfaces with the Earth and Sun sensors, and with the gyros; the EAIM provides the interface with the reaction wheels and the magnetotorquers; the EPRM ensures the necessary command and acquisition capability for the propulsion subsystem, and also interfaces with the solar-array drive mechanism.

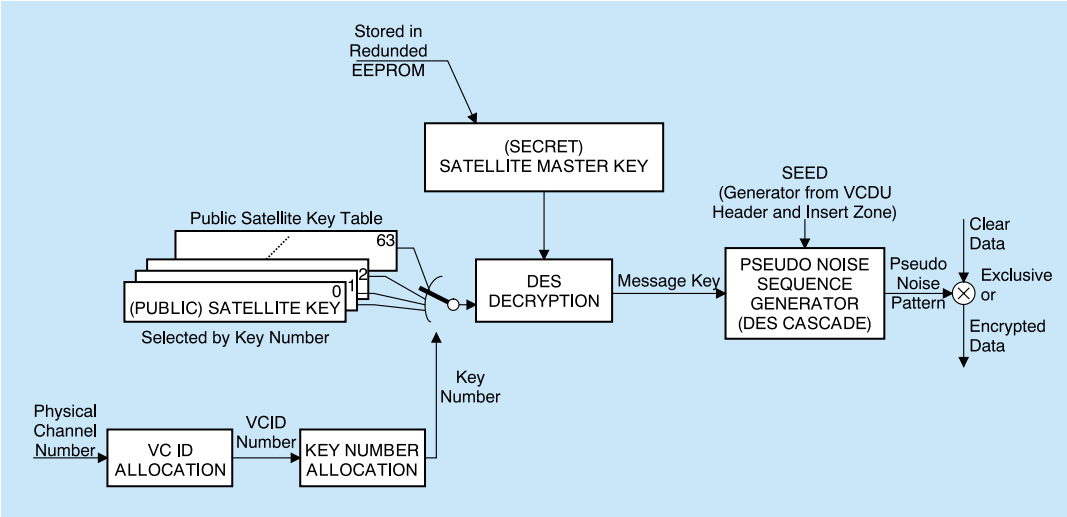

Figure 8: Metop's encryption scheme

In all nominal modes, the AOCS software is part of the SVM central flight software. In Sun-pointed safe mode, the AOCS function is autonomously ensured inside the T4S unit by the survival electronics, which feature an independent computer.

Mission-specific features

High-Rate and Low-Rate Picture Transmission (HRPT/LRPT)

The Metop satellite continuously records its data on-board, but it also provides a continuous direct data-broadcast service, with two simultaneous signals. The HRPT service operates with a microwave link at L-band with the full data content as recorded on-board (at 3.5 Mbps). This service is very similar to the existing service from the NOAA satellites and enables regional meteorological organisations to receive all data relevant to their area in real time. The LRPT service is more innovative and replaces the APT service provided today by the NOAA satellites. It is an analogue broadcast at VHF, providing low-resolution AVHRR images to several thousands of users equipped with small, inexpensive receivers. This system has enabled local cloud patterns to be displayed easily, for example in schools. The digital LRPT service retains the VHF frequency and bandwidth of the APT service, but provides three channels of AVHRR data at the full instrument spatial and radiometric resolution, through the use of a modified JPEG compression scheme. To minimise the effect of ionospheric scintillation at VHF, a powerful interleaving and modulation scheme has been developed which will make the system strongly resistant to data drop-outs, which in the analogue system would result in missing scan lines.

Encryption

In order to limit data access, Metop provides facilities to encrypt data for LRPT and HRPT channels. The encryption scheme is selective on virtual channels and users. Also, there are separate keys for LRPT and HRPT.

The encryption is based on the principle shown in Figure 9. The encryption itself is performed by doing an exclusive OR between each VCDU Data Unit zone and a pseudo-noise pattern. As this operation is fully reversible, the data at ground are decrypted by using the same pseudo-noise pattern with an exclusive OR with data. The pseudo-noise pattern that is the basis for the encryption is created from:

- The secret Master Satellite Key (MSK), which is stored on board and cannot be transmitted to ground via telemetry.
- The Public Satellite Keys, which can be uploaded from the ground periodically to ensure sufficient secrecy and to control data access. On Metop, there is a table of 64 different possibilities. For each encryption process, there is a suitable telecommand in order to select the appropriate key.

These two keys are processed through a Data Encryption Standard (DES) algorithm (decryption part) in order to get the Message Key.

Compression

The AVHRR scanning mirror rotates at 360 rpm, producing five lines (one per channel) of Earth-view samples every 1/6 sec. The samples are 10 bits wide and each Earth-view line contains 2048 pixels (1 pixel is about 1 km), which means a data rate of 2048 (samples) x 3 (spectral bands) x 6 (lines per second) x 10 (bits per sample) = 369 kbps. As the allocated data rate for AVHRR/LRPT is 40 kbps, global factor-10 data compression is required. The following convention has been adopted for the compression (Fig. 10):

- The AVHRR/LRPT will contains only three spectral compressed images and one calibration data packet. Five spectral channels are inside HRPT.

Figure 10. Metop's compression scheme: AVHRR data

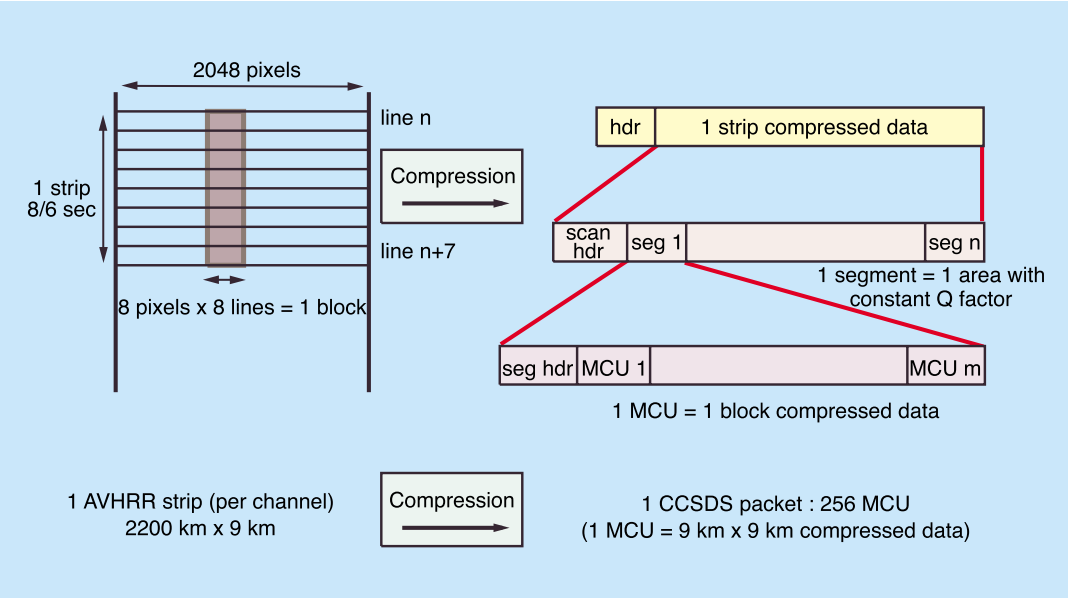

Table 3. Metop's data interface with ground

Data Description	Frequency Domain	Useful Bit Rate
TT&C uplink	S-band 2053.4 MHz	2000 bps in NRZ/PSK/PM
TT&C downlink	S band 2230 MHz	4096 bps in SP-L/PSK/PM
Global Data Stream downlink	X-band 7750-7900 MHz	70 Mbps in QPSK
LRPT downlink	VHF 137.1 MHz	72 kbps in QPSK
HRPT downlink	L-band 1701.3 MHz	3.5 Mbps in QPSK

– The compression is applied to the 10-bit data sample words.
– The compression algorithm is a modified JPEG to accommodate a fixed compression rate and a continuous instrument data rate.

An AVHRR image can be divided into strips (8 lines). The compressed part of the strip will be transmitted in the user data field of one CCSDS packet. The strips are divided into segments. Inside a segment, a constant Q factor is applied. Finally, each segment is divided into blocks of 8 pixels x 8 lines. A compressed block is called a Minimum Coded Unit (MCU). There will be four packets (three channels and one calibration) every 8/6 seconds (1 strip lasts 8/6 sec). The global number of MCUs is 2048/8 = 256. The number of segments can be programmed from the ground, albeit with a potential impact on image quality since a constant Q factor is applied on one segment.

Communications links

The satellite provides data transmission to and from the ground with the characteristics defined in Table 3, and as described previously, in S-band (TT&C), L-band (HRPT), VHF (LRPT) and X-band (global data dump). In addition to these links, Metop provides an Advanced DCS (Argos) service and a Search & Rescue (SARR/SARP) service with the following frequencies:

– A-DCS data reception at 401.65 MHz
– A-DCS data transmission at 466 MHz
– SARR beacon-signal reception at 121.5, 243 and 406.05 MHz
– SARP-2 data reception at 406.05 MHz (common with SARR)
– SARR data transmission at 1544.5 GHz.

These links are performed by means of an antenna farm comprised of the following elements:

– X-band transmit antenna
– S-band TT&C receive/transmit antenna
– LRPT VHF transmit antenna
– HRPT L-band transmit antenna
– CRA: Combined Receive Antenna (uplink)
– SLA: Search and Rescue L-band transmit antenna
– DTA: DCS transmit antenna.

One major consequence of these various space-to-ground links, combined with numerous RF instruments (AMSU A1, AMSU A2, MHS, GRAS, ASCAT), is the fact that ensuring RF compatibility within the satellite is a challenging design requirement leading to an extensive test campaign and a dedicated development approach. esa